SPECIFICATION FOR APPROVAL

CUSTOMER:
MODEL NO: **AT8038L-12M2B-PD1**
DESCRIPTION:
DATE: **2008.12.02**

CUSTOMER APPROVAL SIGNATURE

CUSTOMER APPROVED STAMP

*PLEASE RETURN ONE TO US AFTER CHECKING

UTEC
United Thermal Engineering Corporation
453 Ravendale Dr., Suite C
Mountain View, CA 94043
Tel : 650-428-1188
Fax : 650-428-1110
E-Mail : info@utecusa.com
Web Site : www.utecusa.com

PRODUCT SPECIFICATION

A.GENERAL SPECIFICATION

ITEM		SPECIFICATION/CONDITION
A-1	Part No.	AT8038L-12M2B-PD1
A-2	Outline Dimension	80x80x38
A-3	Rated Voltage	12V
A-4	Operating Voltage Range	8~13.8V
A-5	Starting voltage	8V
A-6	Rated Current	0.26A(Max:0.312A)
A-7	Power Consumption	3.12W(Max:4.2W)
A-8	Rated Speed	3400RPM±10%
A-9	Max. Airflow	52.24 CFM
A-10	Max Static Pressure	7.01 mmH2O
A-11	Noise Level	43.4 dBA(Max:46.2dBA)
A-12	Rotation Direction	Anti-clockwise Direction
A-13	AT8038L-12M2B-PD1	Auto Restare Function

B.ELECTRICAL SPECIFICATION

ITEM		SPECIFICATION/CONDITION
B-1	Temperature life expectancy	70000 Hours(45℃)
B-2	Insulation Resistance	At least 10MΩ at 500VDC between housing and both lead wires.
B-3	Dielectric Strength	Withstand 600VAC 1 minute 1Ma between housing and both lead wires.

C.MAIN MATERIAL/PARTS SPECIFICATION

ITEM	MAJOR COMPONENTS	MATERIAL OR TYPE	GRADE
C-1	Housing & Impeller	Plastic	
C-2	Splash Proof	NO	
C-3	Weight	175.4g	
C-4	LEAD WIRES	UL1007#24 Single Wire	
C-5	CONNECTOR HOUSING	NP Two lead wire	
C-6	CONNECTOR		
C-7	BEARING	Ball Bearing	

D.ENVIRONMENTAL SPECIFICATION

ITEM		SPECIFICATION/CONDITION
D-1	Operation Temperature	-10℃,~+70℃, /66%(RH)
D-2	Storage Temperature	-40℃,~+70℃, /66%(RH)
D-3	Environment Humidity	Less than 85%(RH)

E-1.Shock test

Pulse shape：Half-sine wave
Shock duration time：2ms
Velocity：70～100 inch/sec
Number of shock：one shock for each of six faces (Total : six shocks)

E-2.Vibration

Frequency range：10～500Hz scan 15 minutes．
Direction：X、Y、Z．
Acceleration：1.5g r.m.s，each direction 2 hours．

Figure 1. Fan Performance Curve

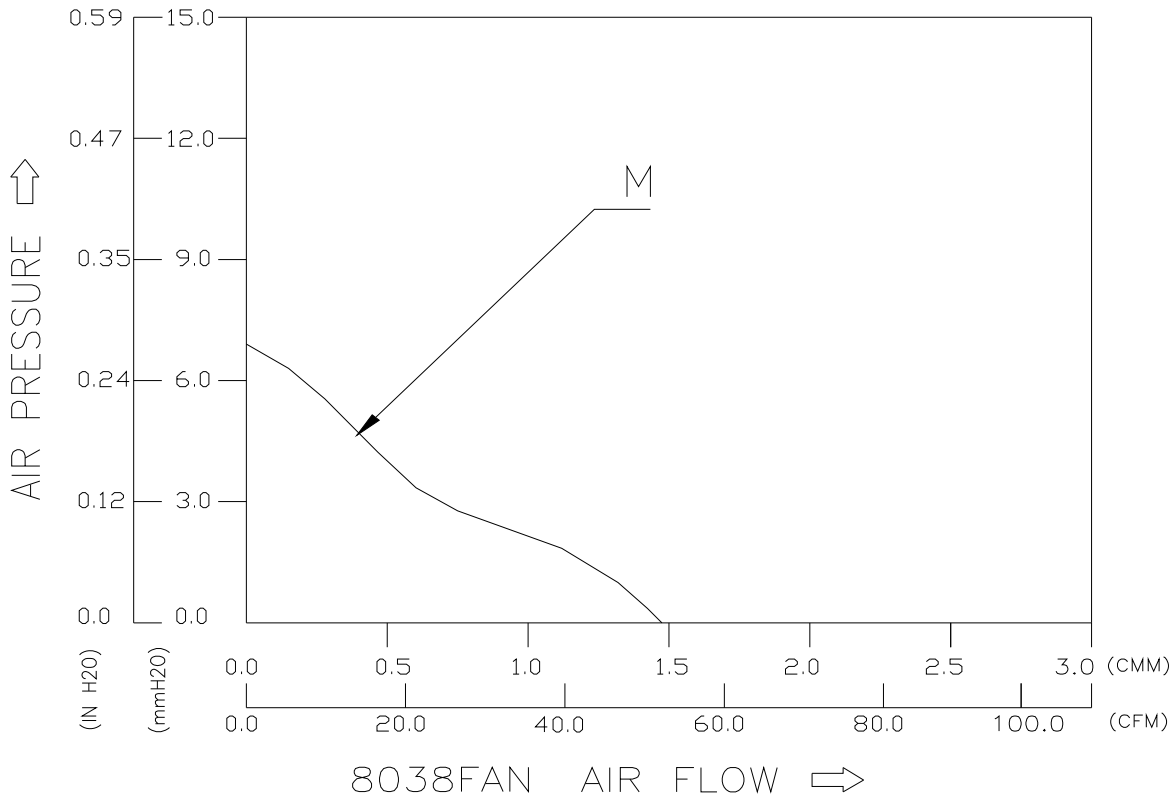

Figure 2 Fan Dimension & Assembly

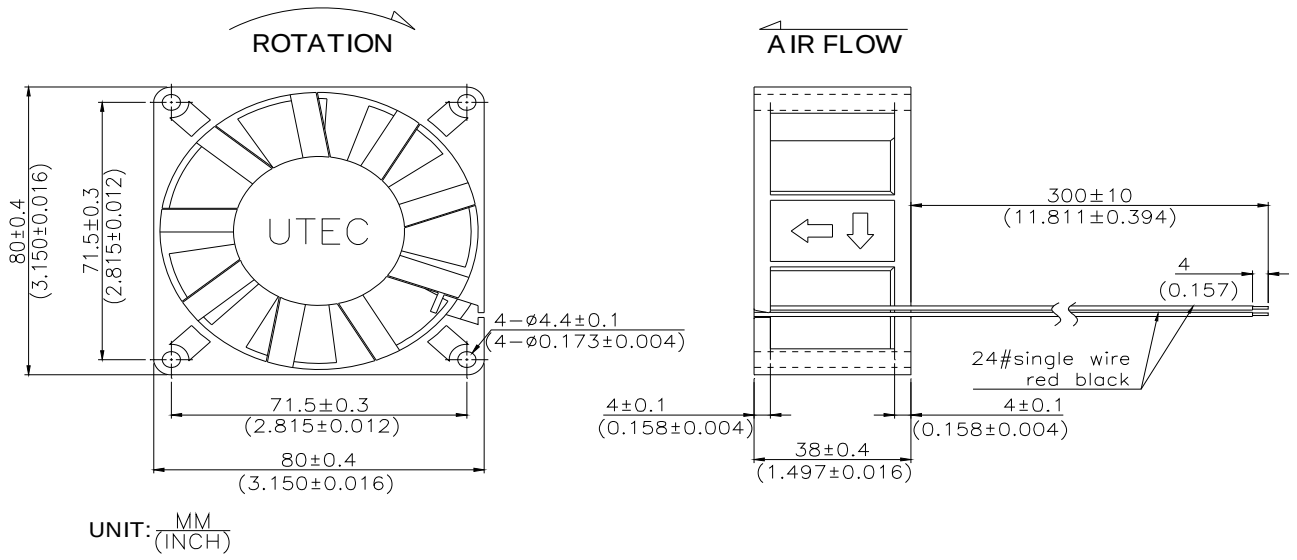

Notes:

1. Tolerances:
2. Impeller must not protrude beyond front surface
3. Minimum 0.50 radius at all rib intersections
4. Unit: mm